REVISIONS				
ZONE	REV	DESCRIPTION	DATE	APPROVED

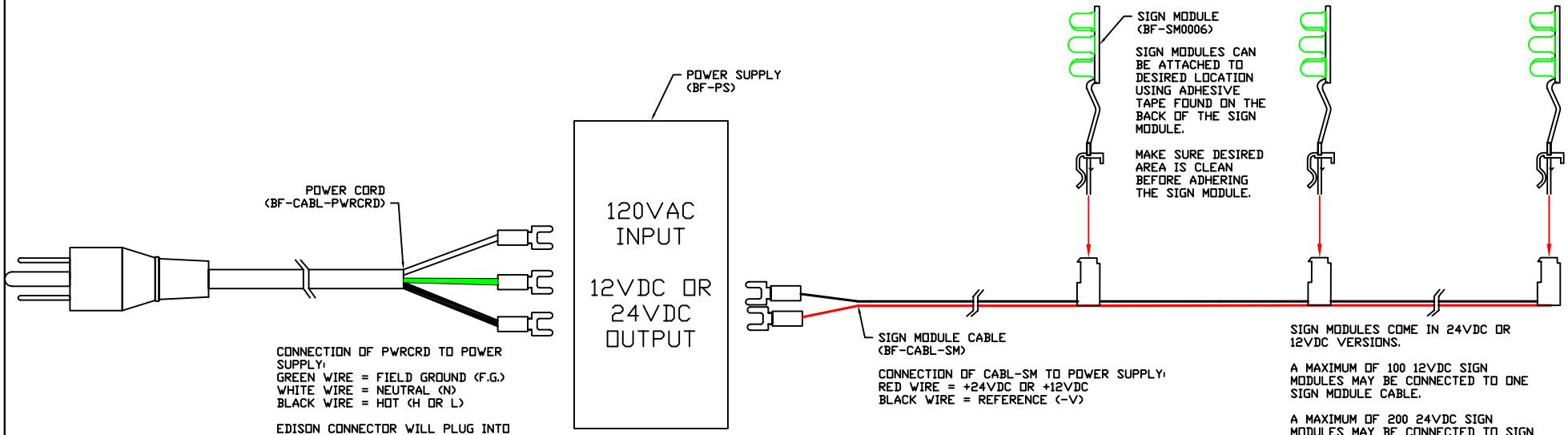

WATTAGE OF POWER SUPPLY AND COLOR OF THE SIGN MODULE WILL DETERIMINE THE # OF SIGN MODULES THAT MAY BE CONNECTED TO A SINGLE POWER SUPPLY.

FOR SIGN MODULES IN COLORS RED, AMBER, AND ORANGE:

WATTAGE	# OF SIGN MODULES PER POWER SUPPLY
500	475
300	285
150	142
100	95
60	57
50	47

FOR SIGN MODULES IN COLORS BLUE, GREEN, AND WHITE:

WATTAGE	# OF SIGN MODULES PER POWER SUPPLY
500	666
300	399
150	199
100	133
60	80
50	66

NOTE:
SYSTEMS VARY. THIS LAYOUT ONLY SHOWS A TYPICAL SIGN MODULE SYSTEM. SOME OF THE COMPONENTS MAY NOT BE UTILIZED FOR A PARTICULAR SYSTEM.

NOTE: THIS DOCUMENT IS CONFIDENTIAL AND PROTECTED BY COPYRIGHTS OF BOCA FLASHER. BOCA FLASHER DOES NOT TAKE ANY RESPONSIBILITY FOR DAMAGE INCURRED IF MODICATIONS ARE MADE TO THE DESIGN WITHOUT THE DESIGNER'S WRITTEN CONSENT.

BOCA FLASHER
552 N.W. 77TH ST
BOCA RATON, FL 33487
(561) 989-5338

SM0006 CONNECTIONS

FILE NAME	SM0006	TOLERANCE	N/A
DRAWN BY	LAURA GLASER		9/10/03
DESIGN BY	LAURA GLASER		9/10/03
APPROVED BY	STEVE MCKINNEY		9/10/03
SCALE 1:2	SHEET 1 OF 1		REV A

REVISIONS				
ZONE	REV	DESCRIPTION	DATE	APPROVED

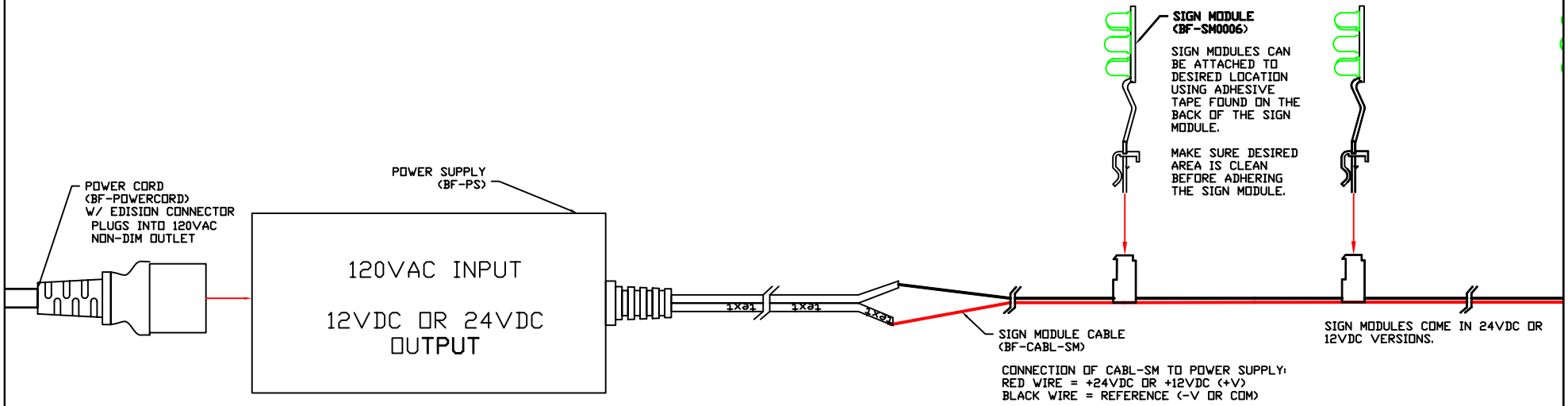

WATTAGE OF POWER SUPPLY AND COLOR OF THE SIGN MODULE WILL DETERIMINE THE MAXIMUM # OF SIGN MODULES THAT MAY BE CONNECTED TO A SINGLE POWER SUPPLY.

FOR SIGN MODULES IN COLORS RED, AMBER, AND ORANGE:

WATTAGE	# OF SIGN MODULES PER POWER SUPPLY
50	47
15	14

FOR SIGN MODULES IN COLORS BLUE, GREEN, AND WHITE:

WATTAGE	# OF SIGN MODULES PER POWER SUPPLY
50	66
15	20

NOTE:
SYSTEMS VARY FROM CUSTOMER TO CUSTOMER.
THIS LAYOUT ONLY SHOWS A TYPICAL SIGN MODULE SYSTEM. SOME OF THE COMPONENTS MAY NOT BE UTILIZED OR MAY BE MODIFIED FOR A PARTICULAR ORDER.

NOTE: THIS DOCUMENT IS CONFIDENTIAL AND PROTECTED BY COPYRIGHTS OF BOCA FLASHER. BOCA FLASHER DOES NOT TAKE ANY RESPONSIBILITY FOR DAMAGE INCURRED IF MODICATIONS ARE MADE TO THE DESIGN WITHOUT THE DESIGNER'S WRITTEN CONSENT.

BOCA FLASHER
552 N.W. 77TH ST
BOCA RATON, FL 33487
(561) 989-5338

SM0006 CONNECTIONS

FILE NAME SM0006, PS50, PS15		TOLERANCE N/A	
DRAWN BY	LAURA GLASER		12/22/03
DESIGN BY	LAURA GLASER		12/22/03
APPROVED BY	STEVE MCKINNEY		12/22/03
SCALE 1:2		SHEET 1 OF 1	REV A